Lifting cable
(two per hanger)

Acoustic barrier
as per ASTM E 557
(by others)

Air duct
(by others)

Cable deflecting sheave

Hanger assembly

Motor

Support steel to structure
above (by others)

Air duct
(by others)

8" [200 mm] steel
channel OR alternate
minimum 6" [150 mm]
wide steel (ie I-beam) to
be approved bySkyfold.
Steel is by others.

Finished ceiling
(by others)

Pocket
(by others)

Pipes
(by others)

F

Access panel
(by others)

Pantograph
assembly

Flexible acoustic
floor seal

Infrared sensor

Glass panel assembly

Wall guide

SKYFOLD
mirage®
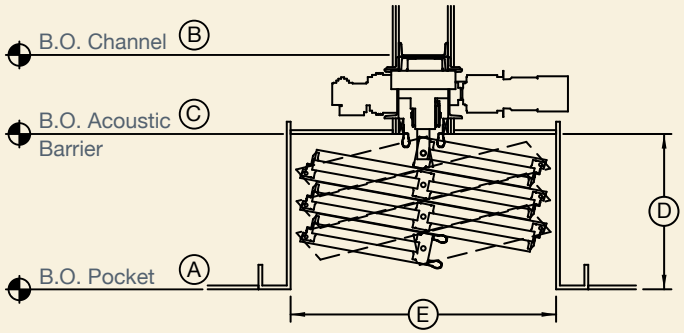
Part of the Railtech Architectural Group